Theory and Practice of Science and Technology
2026, VOL. 7, NO. 2, 35-37
DOI: 10.47297/taposatWSP2633-456907.20260702

Design of a Three-dimensional High-resolution Magnetic Probe Model Based on Printed Circuit Boards

Benchang Zheng, Hongyu Shen

School of Mechanical Engineering University of Shanghai for Science and Technology, Shanghai, 200093, China

ABSTRACT
A three-dimensional high-precision magnetic probe based on printed circuit board (PCB) technology has been developed for precise spatial magnetic field measurement. Through the design of a modular structure, four PCB pick-up coils are integrated into a single unit. This solution significantly reduces the probe volume while eliminating the inevitable geometric errors that occur in the traditional winding method, minimizing the uncertainty of the effective center position, and thereby improving the spatial resolution. This PCB probe, leveraging its inherent advantages, successfully combines miniaturization with high precision, and is particularly suitable for applications such as magnetic field environment diagnosis, vector detection of the geomagnetic field, and precise electromagnetic measurement.

KEYWORDS
High-precision three-dimensional magnetic probe; Printed Circuit Board (PCB); Magnetic field measurement

1 Introduction

Traditional magnetic probes usually have problems such as low resolution and limited detection range, which restrict their application in high-precision magnetic field measurement. However, PCB three-dimensional magnetic probes can accurately measure three-dimensional magnetic fields and have higher spatial resolution than traditional magnetic probes, making them more accurate in detecting complex magnetic field structures, especially having significant value in high-resolution magnetic field diagnostic systems [1-2]. The three-dimensional magnetic probes for printed circuit boards can achieve real-time dynamic monitoring of spatial magnetic fields and accurately detect the dynamic distribution of magnetic field configurations. It can capture the trend of magnetic field changes and reveal the instantaneous behavior and evolution process of plasma. Through high-precision magnetic field measurement, three-dimensional magnetic probes can conduct in-depth analysis of magnetic field interference, topological changes, and the root causes of instability, which is helpful for optimizing magnetic field configurations and improving the confinement efficiency of plasma [3].

2 The Working Principle and Design of the Magnetic Probe

2.1 Principle of the Magnetic Probe

As a passive magnetic field measurement method, magnetic probes are widely used in plasma magnetic field measurement. The head probe of the magnetic probe is usually composed of coils. According to Faraday's law of electromagnetic induction, when the magnetic flux passing through a closed coil changes, an induced electromotive force will be generated at both ends of the coil. This physical process can be expressed by the following formula:

$$\varepsilon = -\frac{d\phi}{dt} \tag{1}$$

In this equation, ε is the magnetic flux.

When calculating the magnetic flux passing through the coil, it essentially involves calculating the integral of the magnetic induction intensity within the area enclosed by the coil [4]. If the magnetic field is uniform, the magnetic induction intensity at any point within the area enclosed by the coil is equal to the average magnetic induction intensity Bav. The calculation can be expressed as follows:

$$\phi_L = \int_S \vec{B} \cdot d\vec{S} = B_{av} S \cos\theta \tag{2}$$

In the formula,S represents the area of the coil-wrapped region,

θ is the angle between the normal vector of plane S and the magnetic induction intensity B.

That is, when the direction of the magnetic induction intensity is parallel to the normal direction of the coil, the value in the above formula is 0. Assuming the coil has N turns, and the area of each turn of the coil is S, the magnetic field passing through the coil is uniform and its direction is parallel to the normal direction of the coil. Combining Equations (1) and (2), the following expression can be obtained:

$$\varepsilon = -N\frac{\Delta\phi_L}{\Delta t} = -NS\frac{dB_{av}}{dt} \tag{3}$$

If the area within the coil wrapping is a uniform alternating magnetic field, according to equation (3), the following expression can be obtained:

$$\varepsilon = -NSB_{av}\omega\cos(\omega t + \varphi) \tag{4}$$

From the above equation, it can be seen that the magnitude of the induced electromotive force is related to the number of turns N of the induction coil and the area S enclosed by the induction coil. Therefore, it is necessary to properly design the NS value of the induction coil. To achieve the measurement of the three-dimensional alternating magnetic field in space, this paper uses three mutually orthogonal induction coils to measure the magnetic induction intensity in three directions [5]. The schematic diagram of the principle is shown in :

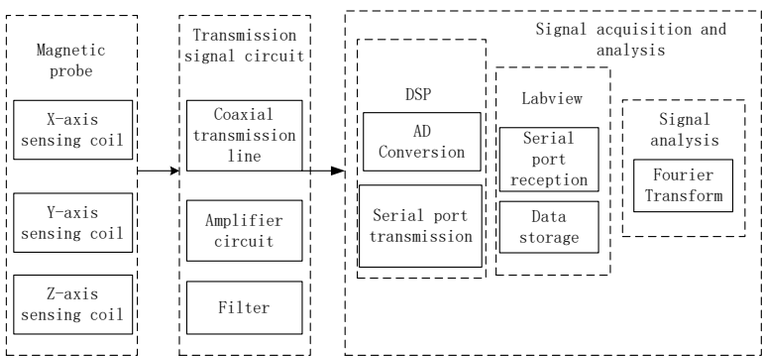

Figure 1 Schematic diagram of three-dimensional magnetic probe measurement

From Equations (2) and (3), it can be seen that when the direction of the magnetic induction intensity is perpendicular to the normal direction of the coil, the angle in the above equation is 90°, that is, in Figure 3-1, the magnetic induction intensities in the y and z directions will not generate an induced electromotive force in the x-directional sensing coil. At this time, the induced electromotive forces in the x, y, and z-directional sensing coils correspond to being generated by the magnetic induction intensities in the x, y, and z directions [6-7].

2.2 Magnetic Probe Design

This three-dimensional magnetic coil adopts a multi-layer concentric structure to ensure uniform signal transmission. Each layer of the coil is arranged concentrically and is nested one inside the other. The winding directions are consistent and the number of turns is evenly distributed. The overall structure is compact and has a high space utilization rate. After being energized, a symmetrical axial magnetic field is formed inside the coil, with a higher magnetic field intensity in the central area and a relatively uniform distribution. This can effectively suppress edge field distortion and is suitable for electromagnetic induction, magnetic field sensing, and high-precision measurement scenarios, providing a basic structural support for subsequent electromagnetic field simulation and performance optimization [8-9].

The overall size of the three-dimensional magnetic probe is 3mm × 3mm × 2mm (1 group). It is assembled from four printed circuit board substrates, forming a three-dimensional structure. The three substrates are respectively equipped with sensing coils, and these three groups of coils are mutually perpendicular in space and can simultaneously measure the three orthogonal components of the magnetic field. Due to the small sensitive volume of this probe, its equivalent magnetic core position can be approximately concentrated at the geometric center of the probe, thereby effectively reducing the measurement error introduced by positional uncertainty. This design ensures a compact structure while maintaining good spatial resolution and is suitable for high-precision magnetic field measurement experiments [10]. The structure of the three-dimensional magnetic probe is shown in the following figure:

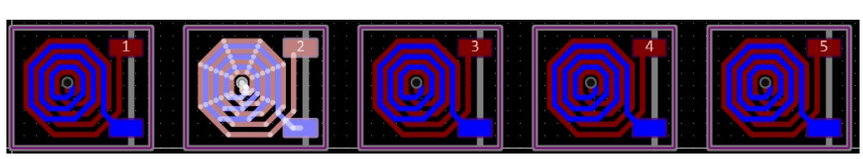

Figure 2 Schematic diagram of the central coil

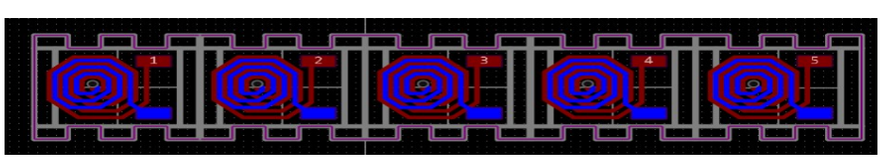

Figure 3 Schematic diagram of the bottom coil

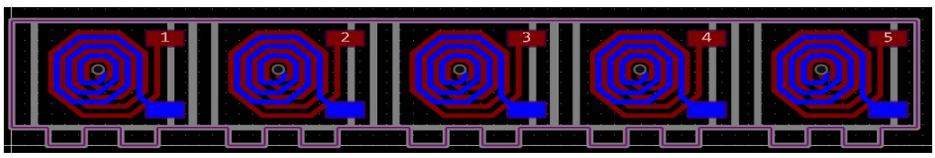

Figure 4 Schematic Diagram of Side Coil

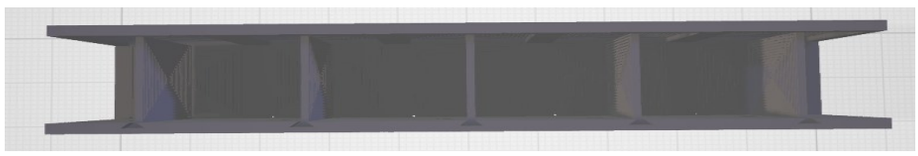

Figure 5 Overall Effect Diagram

3 Conclusion

Based on the principle of magnetic field measurement, this paper successfully designed and implemented a three-dimensional high-precision magnetic probe based on PCB technology. This probe fully utilizes the advantages of precise wiring and structure of PCB. Through an innovative assembly structure, the pick-up coils are integrated into one unit. While achieving miniaturization of the structure, it effectively ensures the accuracy and stability of magnetic field measurement.

References

[1] Yu Q, Fu J, Liao K, et al. Simulation of the multi-channel motional Stark effect diagnostic on EAST Tokamak[J]. Fusion Engineering and Design, 2020, 153: 111516.

[2] Thorman A, Michael C, Howard J, et al. Motional Stark effect imaging first results on the DIII-D tokamak[J]. Review of Scientific Instruments, 2018, 89(10).

[3] Ko J, Chung J, Messmer MCC. Diagnostic development for current density profile control at KSTAR[J]. Fusion Engineering and Design, 2016, 109: 742-746.

[4] Wolf R C, Bock A, Ford O P, et al. Motional Stark Effect measurements of the local magnetic field in high temperature fusion plasmas[J]. Journal of Instrumentation, 2015, 10(10): P10008.

[5] Jiang N, Yu D L, Yan L W, et al. The spectral broadening of motional Stark effect in the HL-2A tokamak[J]. Chinese Physics Letters, 2013, 30(6): 065201.

[6] Zhou Y, Deng Z C, Li Y G, et al. Faraday rotation measurements by phase-based technique on HL-2A[J]. Journal of Instrumentation, 2012, 7(06): C06012.

[7] Zhou Y, Deng Z C, Li Y G, et al. Multi-channel far-infrared HL-2A interferometer-polarimeter[J]. Review of Scientific Instruments, 2012, 83(10).

[8] Zhou Y, Deng Z C, Liu Z T, et al. A new multichannel interferometer system on HL-2A[J]. Review of Scientific Instruments, 2007, 78(11).

[9] Li Y, Zhou Y, Deng Z, et al. Recent progress of the HL-2A multi-channel HCOOH laser interferometer/polarimeter[J]. Plasma Science and Technology, 2015, 17(5): 430.

[10] Yang J, Xie J, Ling W, et al. Design of Three-Dimensional Magnetic Probe System for Space Plasma Environment Research Facility (SPERF)[J]. Sensors, 2024, 24(16): 5302.